MTG

No limits innovation

GENERAL WELDING RECOMMENTADIONS

The "Welding Guide" is intended to assist customers with welding GET products. It is a general welding guide and is not all inclusive. Your specific application may require different welding practices. This welding guide is not intended to be used for joint design of buckets or other attachments. MTG accepts no responsibility for the misuse or misinterpretation of this information.

Welding Instructions

Processes

Welding may be done by any of the following processes:

- Shielded metal arc welding (SMAW)
- Gas-metal arc welding (GMAW)
- Flux-cored arc welding (FCAW)

A combination of SMAW and GMAW or FCAW can be employed.

Consumable

Welding unalloyed and low alloyed consumables

Unalloyed and low-alloyed consumables with tensile strength of up to 500 MPa should be used. Such welding consumables reduce the residual stress level in the joint and thus the susceptibility to hydrogen cracking.

WELDING UNALLOYED & LOW ALLOYED FILLER CONSUMABLES		
Process	**EN Class**	**AWS Class**
SMAW	EN ISO 2560-A E42X	E70X according to A5.1 or equivalent under A5.5
GMAW	EN ISO 14341-A G42X EN ISO 14341-A G46X	E70C-X according to A5.18 or equivalent under A5.28
		ER70S-X according to A5.18 or equivalent under A5.28
FCAW	EN ISO 16834-A T42X	E7XT-X according to A5.20 or equivalent under A5.29

Note that "X" may stand for one or several characters.

Welding austenitic stainless consumables

All MTG GET casting parts can always be welded with austenitic stainless consumables of type AWS 307. Designation for such consumables as per following:

WELDING AUSTENITIC STAINLESS FILLER CONSUMABLES	
Process	**AWS Class**
SMAW	E307-X according to A5.4
GMAW	E307T-X according to A5.22
	ER307 according to A5.9
FCAW	307X according to A5.22

Note that "X" may stand for one or several characters.

Shielding gas considerations

For the shielding gas considerations refer to the welding consumable manufacturer information. When a gas or mixture is used for shielding in any gas-shielded process, it shall meet the requirements of AWS A5.32/5.32M, "Specification for Welding Shielding Gases".

Hydrogen content considerations

If welding with SMAW or FCAW basic flux electrodes should be used giving hydrogen content less than 5ml/100g weld metal.

Electrical Characteristics

Welding shall be done using the following electrical characteristics:

Polarity

All welding shall be done using direct current reverse electrode positive (D.C.E.P.) except for GTAW weld toe dressing as described in Sec.1.8.4., which shall be done using direct current reverse electrode Negative (D.C.E.N).

Current and voltaje ranges

SMAW	
Electrode Diameter	Current (Amperes)
2.4mm / 3/32 in.	65 to 120
3.2mm / 1/8 in.	80 to 160
4.0mm / 5/32 in.	115 to 220
4.8mm / 3/16 in.	140 to 300
6.4mm / 1/4 in.	230 to 375

GMAW & FCAW		
Electrode Diameter	Voltage (Volts)	Current (Amperes)
1.14mm / 0.045 in.	22 to 30	220 to 320
1.59mm / 1/16 in.	25 to 35	250 to 360
2.4mm / 3/32 in.	25 to 35	360 to 500

Heat input considerations

Minimum heat input to be applied shall meet the requirements of AWS D14.8M, "Standard Methods for the Avoidance of Cold Cracks".

As reference, typical heat input values to be applied lie in the range from 2 kJ/ mm to 2.5 kJ/ mm.

Position

All welding is to be done preferably on the flat or horizontal position. Deviation from the flat or horizontal position is permissible following the figure shown below which is adapted from AWS D14.3, Specification for Welding Earthmoving and Construction Equipment.

Longitudinal axis of weld may be inclined no more than 15° with respect to the horizontal plane.

Centre of weld face (C) must lie within rotational limits of 80° to 280° as indicated.

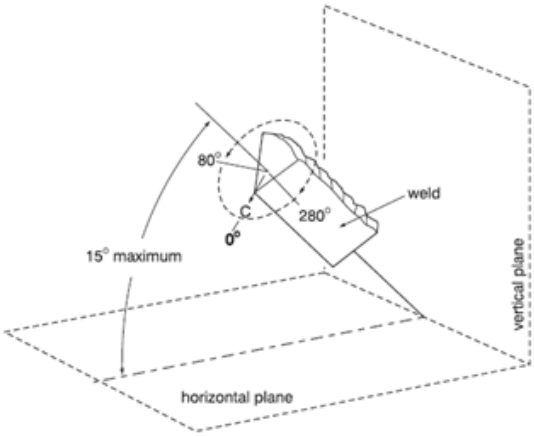

Preparation of plate and castings

Cleaning

All mill scale, rust, paint, oil grease, arc air slag or moisture shall be removed from the surfaces within 12.5 mm / 0.5 in. of any weld location. The surfaces must be sufficiently clean so that there is nothing that might contain moisture or hydrocarbons, which break down in the heat of the arc producing hydrogen, which can be absorbed in the weld and cause cracks. Removal may be accomplished by shot blasting, sand blasting, grinding or machining. Any porosity, burned-in sand or other defects visible on the weld prep surfaces must be removed by grinding or arc air gouging.

Preheat, interpass temperaturas and post weld heat treatment

Temperatures

Prior to any cutting, gouging, taking or welding operation, preheating of GET casting parts and lip is required. All material within 100 mm / 4 in. from the welding start location must be within the specified temperature range before starting a weld bead.

The minimum preheating temperature to be applied is 150ºC or the temperature recommended by the lip manufacturer if it is higher than 150ºC. In order to maintain GET castings hardness, temperatures in excess of 250ºC are not advised.

If the ambient humidity is high and/or the room temperature is below 41°F / 5°C, the preheating temperature should be increased by 78°F / 25°C.

Preheaters

Preheating with burners or torches is much more effective when the heat is applied from the bottom side of the work piece with insulating blankets on the topside. The blankets help to disperse the heat evenly as well as retain the heat that has been input.

Measurement

Temperatures may be measured by means of contact pyrometers, temperature indicating crayons (e.g. "Tempilsticks"), or infrared indicators.

Maximum interpass temperature can be directly measured in the weld metal or in the immediately adjacent area.

Cool down rates

After welding completion, cool slowly. Do not allow drafts or cool ambient temperatures to cool the parts or assembly. Cool down rate should not exceed 130°F / 55°C, per hour. If the ambient temperature is at or below 40°F / 5°C, the part should be covered in a thermal blanket to insure the cool down rate listed above is achieved.

Post weld heat treatment

After welding completion, whenever is possible, to make a post weld Heat Treatment is a good practice, tempering the entire part can be post-heated to 300-400ºF / 150-200ºC for 4 hours and then air cooled.

Welding Technique

Welding

Prior to welding clean the surfaces according to procedure detailed in Section 1.5.1. Welds shall consist preferably of stringer beads. However, weaving is permitted to extend that bead widths are no greater than three times the electrode diameter. Each bead shall merge smoothly into the adjoining bead or base metal surface.

Clean each pass of deposited weld metal before applying an adjoining pass. Cleaning may be accomplished using manual slag hammers, pneumatic needle guns, wire brushes, or any combination of these tools.

Note: Under normal conditions, it is a good idea to put root layers and several weld layers in using the SMAW Welding Process and E7018 electrodes that have been kept dry in a rod oven according to the producer specifications. If this info is not available keep them in a rod oven from 65°C / 150°F to 150°C / 302°F. for two hours. Then go to the GMAW or FCAW Welding Processes. This helps reduce heat input in the thin root layer sections of the weld joint.

Do not weld within 19 - 25mm / 0.75 - 1.00 in. of the lip leading edge.

Welding stopping

Whenever the ends of weld beads will be located within the finished product, the welder shall execute an appropriate stopping procedure so as to avoid crater cracks.

When welding with the SMAW process, the simplest method for accomplishing this is to stop travel for a short time at the end of the bead prior to breaking the arc. Alternatively, the travel direction may be reversed for a distance of approximately 10mm / 0.38 in. before breaking the arc.

When welding with the FCAW or GMAW processes, it is preferable to briefly extinguish the arc, initiate it for a short time and then extinguish it.

Welding finishing

In order to improve resistance to hydrogen assisted cracking and fatigue cracking, one or more weld finishing techniques may be used.

These include application of Temper Beads, Grinding, Weld top Peening, and GTAW (TIG) Dressing.

As a minimum, all adapter lip welds shall be ground and it is also recommendable a Weld Toe Peenning or a GTAW (TIG) process.

Grinding

The surfaces of adapter/lip fabrication welds shall be ground smooth 65 - 75mm / 2.50 - 3.00 in. from the front ends as indicated in the figures below. All welds on both the top and bottom of the lip shall be ground.

Grinding shall produce a smooth surface free of roughness and unevenness associated with the weld beads. The toes of the welds shall merge smoothly with the lip and the adapter with a minimum radius of 4mm / 0.16 in.

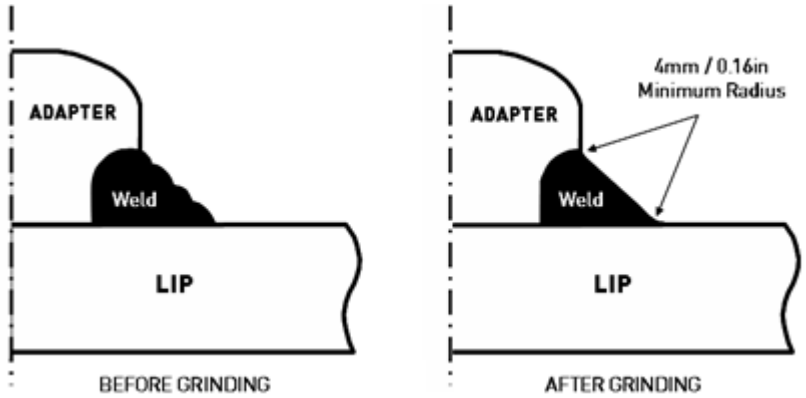

Grinding shall be done using high speed electric or pneumatic grinders with grinding wheels no larger than 50mm / 2.00 in. in diameter. ANGLE HEAD OR DISK GRINDERS ARE NOT ALLOWED FOR THIS WORK.

Grinding shall be done with the perimeter of the wheel and not the face. The grinding direction must be perpendicular to the toes of the welds as in the following illustrations:

Proper Grinding Directions:

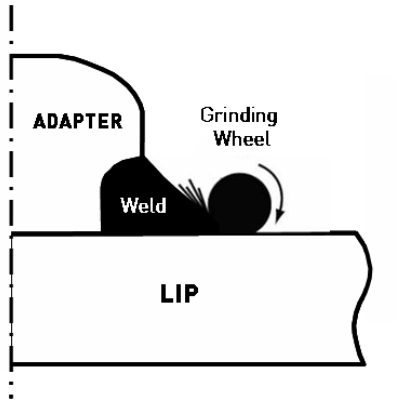

Grinding the radio at the toes of the welds is facilitated by the use of cone-shaped grinding wheels. For final grinding, the abrasive may be no coarser than 24 Grit.

Weld Toe Peening

Certain welds may be required by the drawing to be subjected to Weld Toe Peening. This is to be conducted using a pneumatic hammer having the following specifications:

Pneumatic Peening Gun Specifications:

Air Pressure	Air Consumption	Stroke Length	Blows Per Minute
6.2 bar / 90 psi	340 1/minute / 12 ft 3/minute	32mm / 1.13 in.	4600

Peening tools shall be made of hardened tool steel, with the tip hardness at least HRc55. The tips shall be carefully radius so as to eliminate all corners and shall be polished to a fine finish. In order to preserve the tip geometry and finish, these tools are to be used strictly for weld toe peening and no other purpose. Any marked changes in tip geometry or finish due to wear requires the tip to be re-ground and polished.

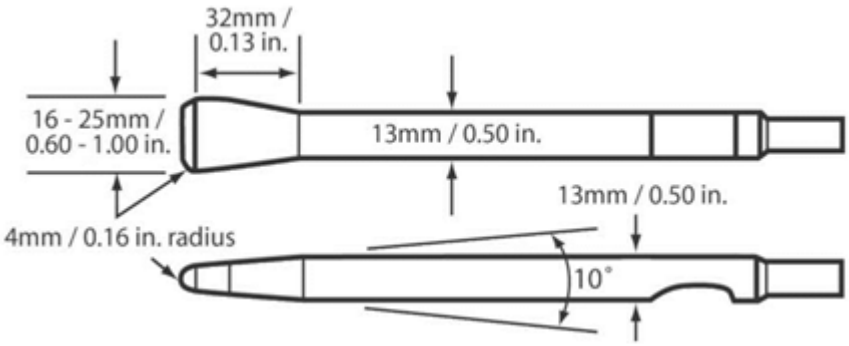

Any defects or pronounced undercut along the toes of the welds must be corrected by grinding or repair welding before the peening process.

During peening, the temperature of the work piece must be below 200°C / 400°F. The peening tool shall be held firmly against the toe of the weld such that the edge of the bit lies along the toe of the weld.

The tool shall be oriented at an angle approximately bisecting that formed by the weld fillet and the base metal. The operator shall move the tool slowly 200 - 300mm / 8.00 - 12.00 in. per minute along the toe of the weld so as to produce a smooth, continuous groove 0.4 - 0.8mm / 0.02 - 0.03 in. deep.

GTAW (TIG) Dressing

This process involves using a GTAW torch to make an autogenous weld pass along the toe of the weld fillet.

The welding power supply shall have high-frequency start capabilities. "Scratch-starting" is not allowed. It is preferable to employ a remote foot-pedal current control so as to permit suitable filling of craters at the ends of beads.

Process	GTAW	
Electrode Type	AWS EWTh-2 (2% Thoriated)	
Electrode Dia.	2.4 to 4mm / 3/32 to 5/32 in.	
Shielding Gas	100% Argon	
Gas Cup Size	13mm / 0.50 in.	
Gas Flow Rate	9.4 to 14.2 1/minute / 20 to 30 ftVhour	
Current Type	Direct	
Polarity	Straight (Electrode Negative)	
Current Range	2.4mm / 3/32 in.	175 to 250 Amperes
	3.2mm / 1/8 in.	250 to 300 Amperes
	4.0mm / 5/32 in.	400 to 500 Amperes
Electrode to Work Distance	1.6 to 3.2mm / 1/16 to 1/8 in.	

Any defects along the toes of the welds must be corrected by grinding or repair welding before the GTAW process. The torch shall be positioned over the weld toe and shall be oriented so as to produce a smooth weld bead without undercut. The welder shall control the travel speed so as to obtain a bead ranging from 4.8 - 8mm / 0.19 - 0.31 in. wide.

The GTAW dressed is recommendable to be performed along to the weld toes on the top and bottom legs according to the next figure.

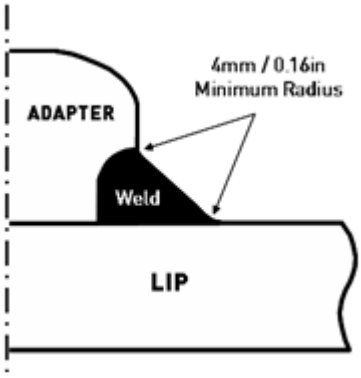

Tempering beads

A tempering or annealing bead is an additional weld pass that is added to the weldment once the weld joint is completely filled. This extra weld pass is used in all weld joints that weld is deposited against the heat treated steel castings.

The heat of this weld pass tempers or anneals the final weld pass against the casting and the heat affected zone (HAZ) within the casting caused by the weld pass adjacent to the casting.

This weld pass should be deposited from 3mm (1/8") to 5mm (3/16") away from the final weld pass against the casting as the following picture shows.

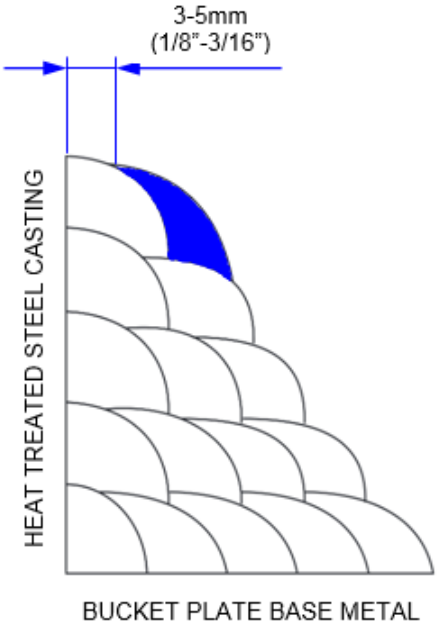

Inspection

After completion of welding, all welds shall be subjected to visual and magnetic particle inspection.